Cambridge Assessment International Education

Cambridge International AS & A Level

CANDIDATE NAME	

CENTRE NUMBER						CANDIDATE NUMBER				

9756497916

PHYSICS **9702/32**

Paper 3 Advanced Practical Skills 2 **May/June 2024**

2 hours

You must answer on the question paper.

You will need: The materials and apparatus listed in the confidential instructions

INSTRUCTIONS

- Answer **all** questions.
- Use a black or dark blue pen. You may use an HB pencil for any diagrams or graphs.
- Write your name, centre number and candidate number in the boxes at the top of the page.
- Write your answer to each question in the space provided.
- Do **not** use an erasable pen or correction fluid.
- Do **not** write on any bar codes.
- You will be allowed to work with the apparatus for a maximum of 1 hour for each question.
- You should record all your observations in the spaces provided in the question paper as soon as these observations are made.
- You may use a calculator.
- You should show all your working and use appropriate units.

INFORMATION

- The total mark for this paper is 40.
- The number of marks for each question or part question is shown in brackets [ ].

For Examiner's Use	
1	
2	
Total	

This document has **12** pages. Any blank pages are indicated.

© UCLES 2024
[Turn over

BLANK PAGE

© UCLES 2024

You may not need to use all of the materials provided.

1 In this experiment, you will investigate an electrical circuit.

(a) ● Connect the circuit shown in Fig. 1.1.

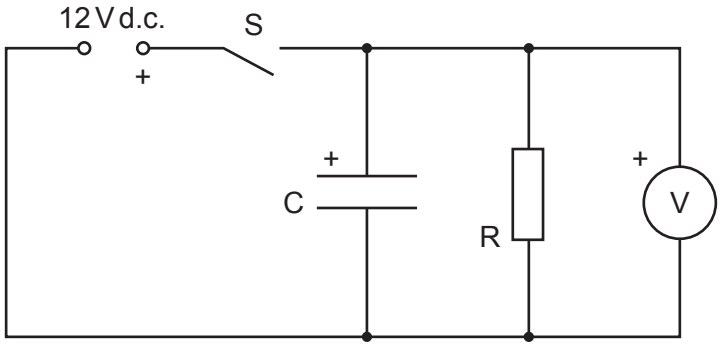

Fig. 1.1

- **Ensure that the polarities of the power supply, component C and the voltmeter are as shown in Fig. 1.1.**
- Close switch S for a short time and then open it.
- Watch the voltmeter reading as it reduces.

  When the voltmeter reading passes a value V_S of 8.00 V, start the stop-watch.

  When the voltmeter reading passes a value of 7.00 V, stop the stop-watch.
- Record the starting value V_S and the time T for the voltmeter reading to fall by 1.00 V.

V_S = ...

T = ...
[2]

(b) Choose another starting value V_S. Close S for a short time and then open it. Measure the time T for the voltmeter reading to fall by 1.00 V from the starting value V_S.

Repeat until you have six sets of values of V_S and T.

Record your results in a table. Include values of $\frac{1}{T}$ in your table.

[10]

(c) **(i)** Plot a graph of $\frac{1}{T}$ on the y-axis against V_S on the x-axis. [3]

(ii) Draw the straight line of best fit. [1]

(iii) Determine the gradient and y-intercept of this line.

gradient = ...

y-intercept = ...
[2]

© UCLES 2024

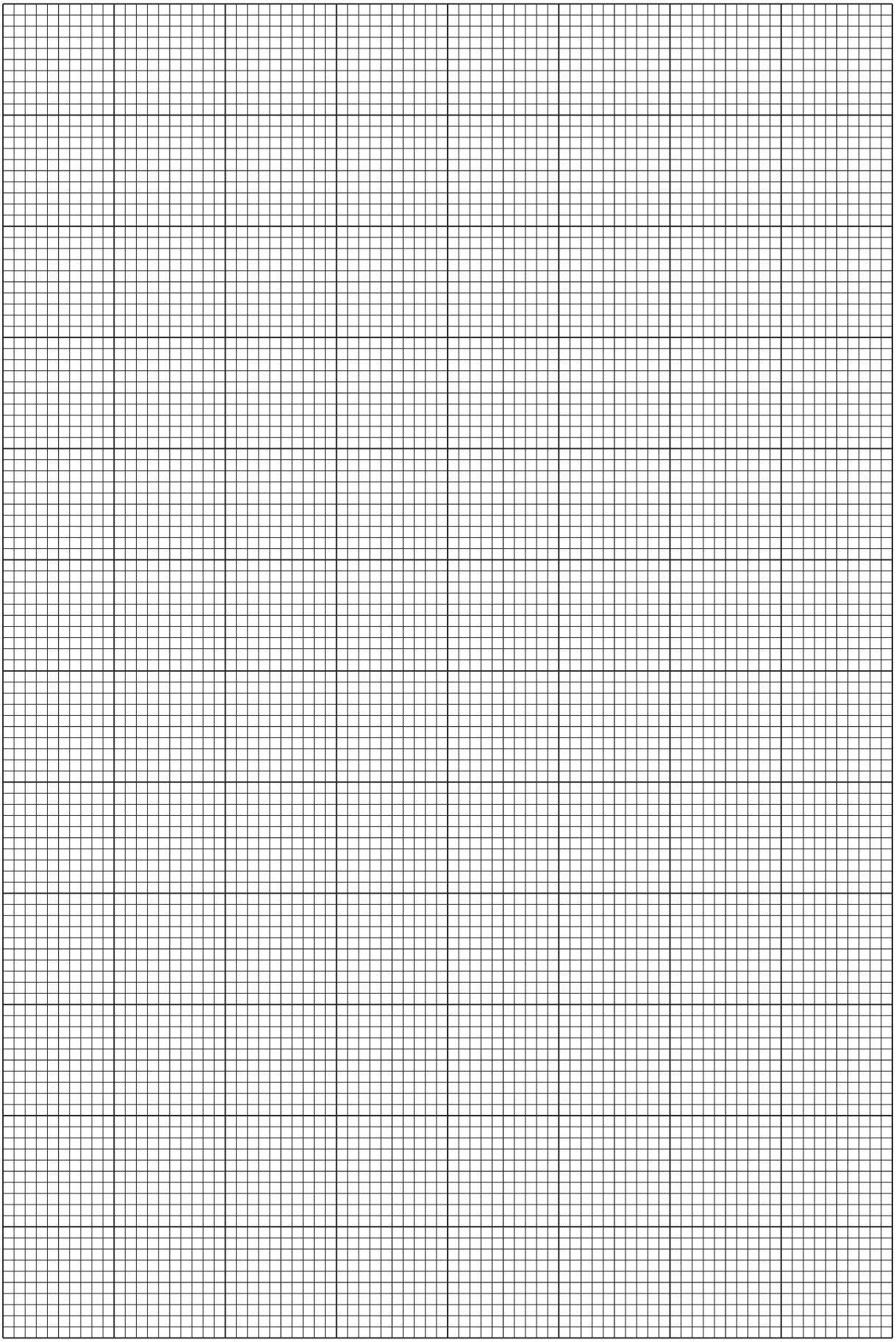

(d) It is suggested that the quantities V_S and T are related by the equation

$$\frac{1}{T} = aV_S + b$$

where a and b are constants.

Using your answers in **(c)(iii)**, determine the values of a and b.
Give appropriate units.

a = ...

b = ...
[2]

[Total: 20]

You may not need to use all of the materials provided.

2 In this experiment, you will investigate the equilibrium of a wooden rod.

(a) (i) ● Assemble the apparatus as shown in Fig. 2.1.

● Adjust the apparatus so that the wooden rod is parallel to the bench and the spring is vertical.

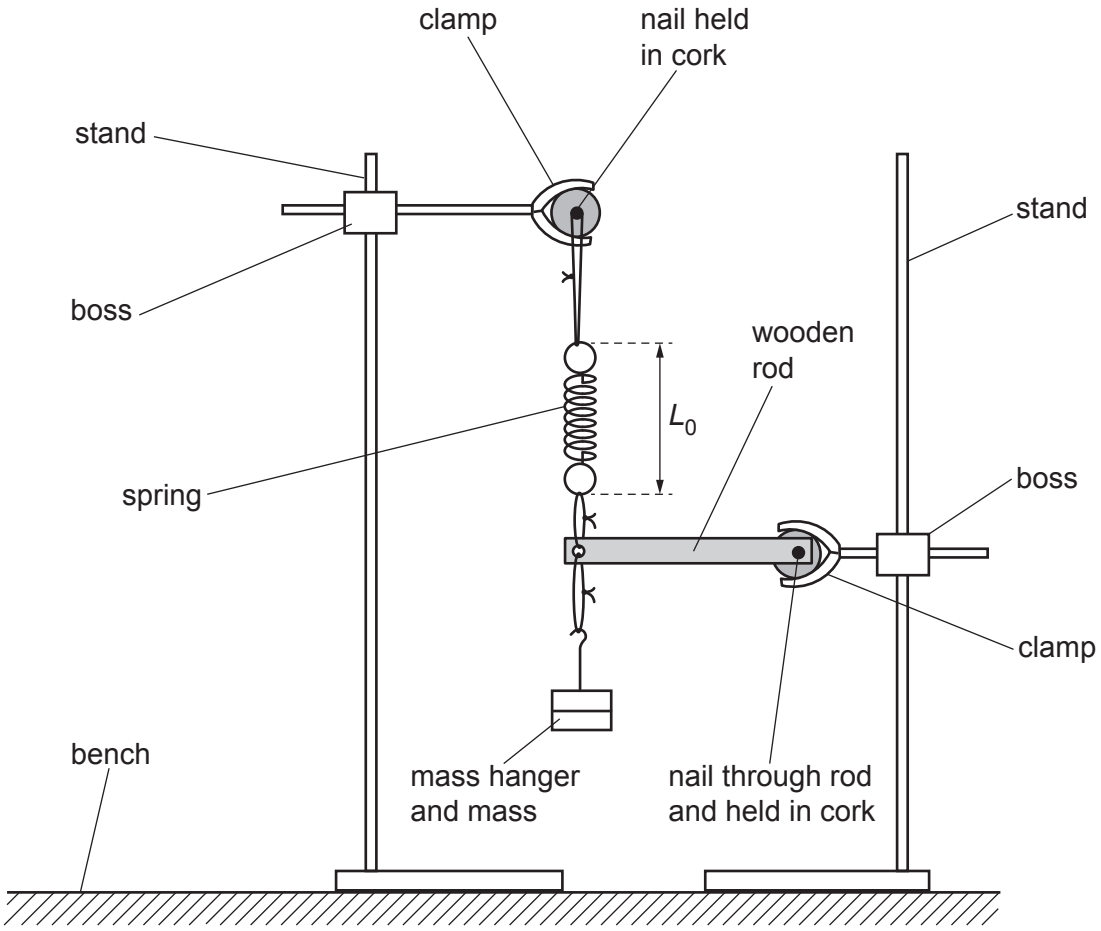

Fig. 2.1 (not to scale)

● The distance between the ends of the spring is L_0, as shown in Fig. 2.1.

Measure and record L_0.

L_0 = ... m [1]

(ii) ● Pull the mass hanger down a short distance and then release it. The mass hanger will oscillate.

● Take measurements to find the period T of the oscillations.

T = ... [2]

(iii) ● Calculate the value of the spring constant k using

$$k = \frac{\alpha\pi^2}{T^2}$$

where α = 0.800 kg.

k = ... N m^{-1}

● Justify the number of significant figures that you have given for your value of k.

.....

.....

.....

[1]

© UCLES 2024

(b) (i) ● Move the stand supporting the spring away from the other stand and add the plumb line, as shown in Fig. 2.2.

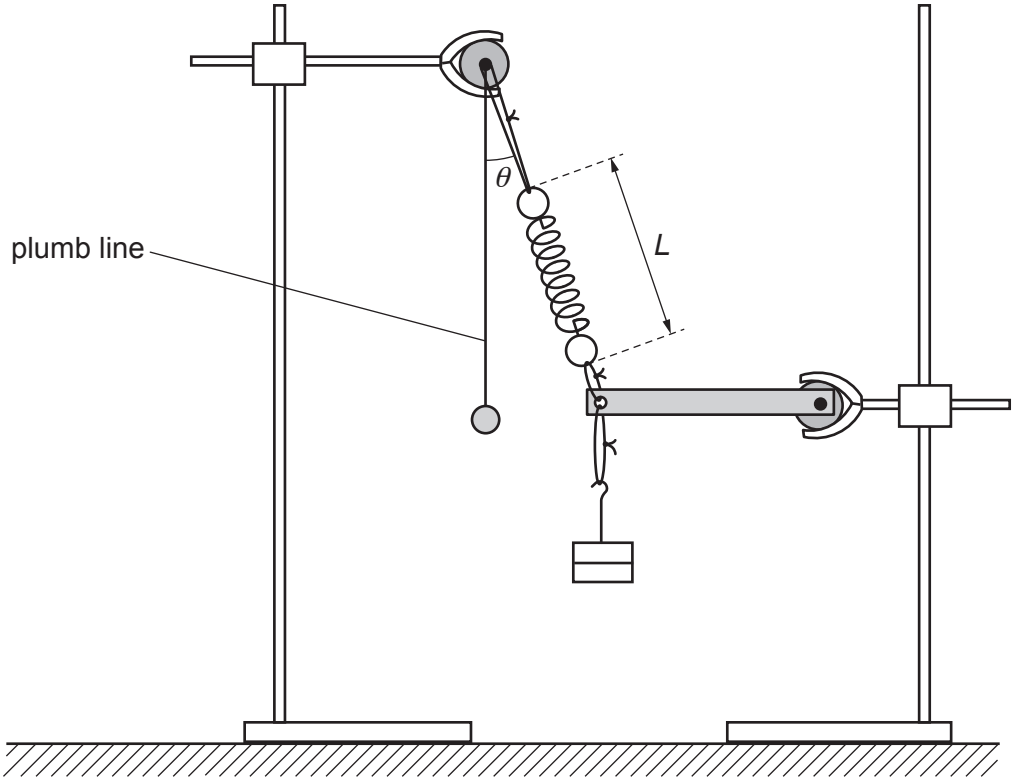

Fig. 2.2 (not to scale)

- Adjust the apparatus so that the angle θ between the spring and the vertical is approximately 20° and the wooden rod is parallel to the bench, as shown in Fig. 2.2.
- The new distance between the ends of the spring is L, as shown in Fig. 2.2.

  Measure and record L.

  L = ... m
- Measure and record θ.

  θ = ... °

[2]

(ii) Estimate the percentage uncertainty in your value of θ. Show your working.

percentage uncertainty = ...% [1]

© UCLES 2024

(iii) Repeat **(b)(i)** using an angle θ of approximately 45°.

L = ... m

θ = ... °
[3]

(c) It is suggested that the relationship between L and θ is

$$k(L - L_0) + B = \frac{D}{\cos\theta}$$

where B = 2.0 N and D is a constant.

Using your data, calculate two values of D.

first value of D = ...

second value of D = ...
[1]

(d) It is suggested that the percentage uncertainty in the values of D is 10%.

Using this uncertainty, explain whether your results support the relationship in **(c)**.

.....

.....

.....

..... [1]

© UCLES 2024

(e) (i) Describe **four** sources of uncertainty or limitations of the procedure for this experiment.

For any uncertainties in measurement that you describe, you should state the quantity being measured and a reason for the uncertainty.

1 .....

.....

2 .....

.....

3 .....

.....

4 .....

.....

[4]

(ii) Describe **four** improvements that could be made to this experiment. You may suggest the use of other apparatus or different procedures.

1 .....

.....

2 .....

.....

3 .....

.....

4 .....

.....

[4]

[Total: 20]

© UCLES 2024

BLANK PAGE

Permission to reproduce items where third-party owned material protected by copyright is included has been sought and cleared where possible. Every reasonable effort has been made by the publisher (UCLES) to trace copyright holders, but if any items requiring clearance have unwittingly been included, the publisher will be pleased to make amends at the earliest possible opportunity.

To avoid the issue of disclosure of answer-related information to candidates, all copyright acknowledgements are reproduced online in the Cambridge Assessment International Education Copyright Acknowledgements Booklet. This is produced for each series of examinations and is freely available to download at www.cambridgeinternational.org after the live examination series.

Cambridge Assessment International Education is part of Cambridge Assessment. Cambridge Assessment is the brand name of the University of Cambridge Local Examinations Syndicate (UCLES), which is a department of the University of Cambridge.

© UCLES 2024